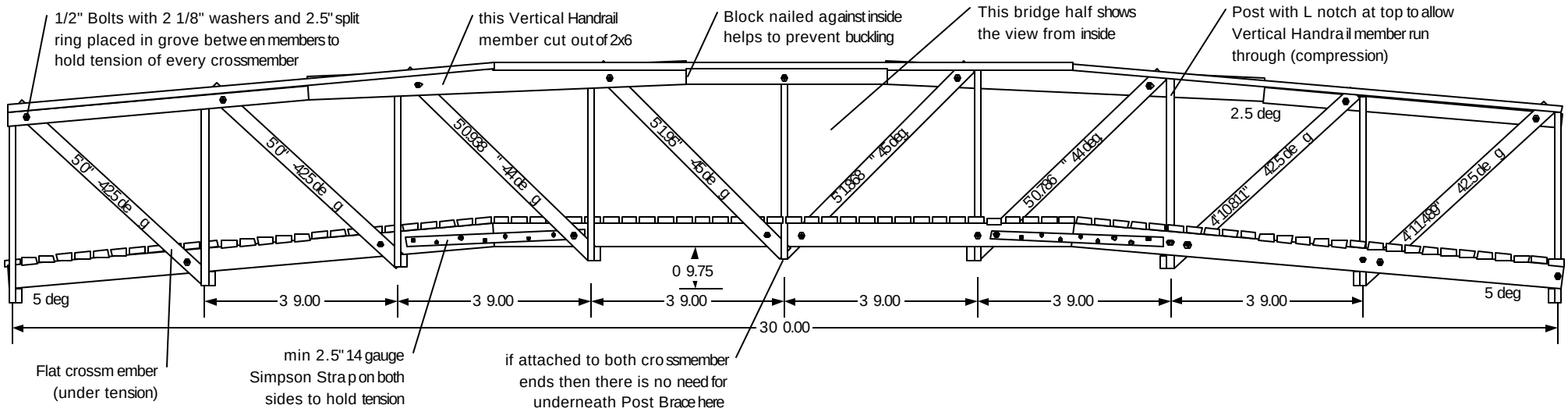

Elarra Bridge Pratt Arched (Version 9)

2006 Marc Schwager, Millo Fenzi, Thomas Zscherpel

Changes from previous Version:
+ modified Handrail members to overlap 4 feet

Design Data Hardware:
Bolt Grade 2 tensile strength (breaking):
5/16" = 3900lbs 1/2" = 10500lbs
(shear ~60% tensile):
Bolt Grade 2 safe shear strength (work load):
5/16" = 575 lbs 1/2" = 1470lbs

2.5" Split Ring Connector:
Top & Bottom member: DougFir (Group B), 1.5" thick, 1 face at 45deg = 2250lbs
Crossmember: DougFir (Group B), 1.5" thick 1 face, ~2.5" from end = 2700lbs x75% = 2025 lbs

Design Data Douglas Fir:
Compression strength parallel to grain: 1700 psi
Moisture content: 10-30%
Weight (seasoned & dry): 33.11 lb/cf
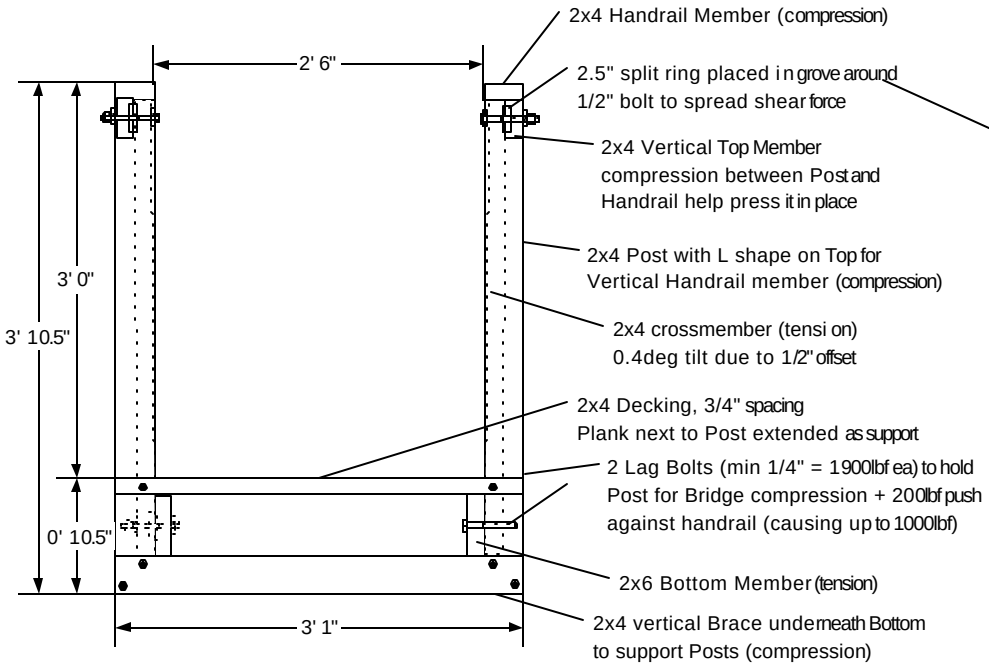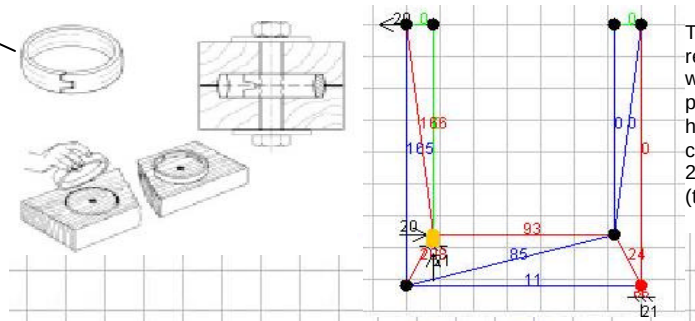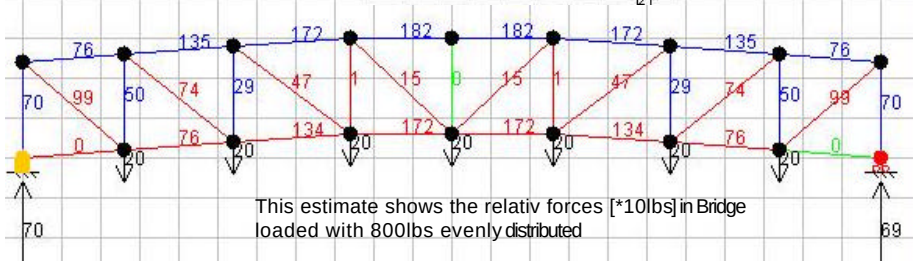
2x4 Decking: 88x 2'6" = 220ft (8.02cf)
2x6 Bottom Members: 2x 30' = 60ft (3.53cf)
2x4 Handrail Members: 4x 30' = 120ft (4.375cf)
2x4 Posts: 18x 3'9" = 67.5ft (2.46cf)
2x4 Crossmembers: 16x 5'2" = 83.2ft (3.03cf)
2x4 Bottom Braces: 8x 3'1" = 25ft (0.91cf)
Total: 575 ft (22.325cf) Weight: 739 lbs